INSTALLATION MANUAL

THIS CEILING FAN MUST BE INSTALLED BY A QUALIFIED ELECTRICIAN, AND AN ELECTRICAL SAFETY CERTIFICATE MUST BE ISSUED ON COMPLETION OF THE INSTALLATION

Congratulations on the purchase of your new quality Brilliant Ceiling Fan. Before first using, it is most important that you read and follow the instructions in this Installation Manual, even if you feel you are quite familiar with this type of product.

Find a place and keep this manual handy for future reference.

Model Name: CAIRNS ABS AC CEILING FAN WITH B22 LIGHT KIT			
Code	**Colour**	**Size**	**Light**
22878/05	Matt White	48” (1220mm)	2 x B22
22878/06	Matt Black	48” (1220mm)	2 x B22
22880/05	Matt White	52” (1320mm)	2 x B22
22880/06	Matt Black	52” (1320mm)	2 x B22

IMPORTANT SAFEGUARDS

Read all instructions carefully, even if you feel you are quite familiar with this type of appliance.

When using electrical appliances, in order to reduce the risk of fire, electric shock, and/or injury, these basic safety precautions should always be followed:

1. This ceiling fan **MUST** be installed by a Qualified Electrical Contractor in accordance with the local regulations, and all local, state and national electrical codes. Any alterations or additions to building wiring must be completed by a licensed electrical mechanic, or person authorised by legislation to work on the fixed wiring of any electrical installation.
2. The ceiling fan must be connected to a 240V AC 50Hz power supply.
3. All electrical work must only be undertaken after disconnection of the power by removing fuses or turning off the circuit breaker, to ensure all pole isolation of the electrical supply.
4. The fan must be electrically Earthed.
5. The fan must be installed that the blades are **at least 2.1** metres above the floor.
6. The structure that the ceiling fan is connected to must be capable of supporting a weight of at least 45kg. The fixing must be able to support the moving weight of the fan and must not twist or work loose.
7. Make sure that the installation site will not allow the rotating fan blades to come into contact with any object and that there is a minimum clearance of 150mm (6”) from the blade tip to the wall or ceiling. Please note that the bigger this clearance is the better the airflow from your fan will be.
8. **DO NOT** use outdoors unless covered. Refer to Warranty terms for Alfresco use.
9. **DO NOT** connect the fan motor to a dimmer switch. This may damage to the motor. Use ONLY the provided wall controller.
10. This appliance is not intended for use by young children or infirm persons without supervision.
11. Young children should be supervised to ensure that they **DO NOT** play with the appliance.
12. It is not recommended that ceiling fans and gas appliances be operated in the same room at the same time.
13. The fan must be turned off and stopped completely before reversing the fan direction. This will prevent any damage to the motor of the fan or controller (if installed).
14. Do not insert anything into the fan blades whilst they are spinning. This will damage the blades and upset the balance of the fan causing the unit to wobble.
15. After the fan is completely installed make sure that all base and fan blade fixings are secured and tightened to prevent any problems.
16. Because of the fan’s natural movement, some connections may loosen. Check the support connections, brackets and blade attachments twice a year to make sure they remain secured. If any are loose, tighten.
17. A blade balancing kit is included. Ensure blades are balanced immediately after installation to reduce wobble and noise.
18. An all-pole disconnection incorporated in the fixed wiring is to be provided, such as an all-pole switch or a supply cord fitted with a plug.
19. If a remote control is installed, remove the wall controller.
20. Beware of height installation closure.

IMPORTANT NOTE:

The important safeguards and instructions given in this manual are not meant to cover all possible conditions and situations that may occur. It must be understood that common sense, caution and care are factors which cannot be built into any product. The persons caring for and using the unit must supply these factors.

FAST
INSTALLATION

OUR FANS ARE 90% PRE-ASSEMBLED STRAIGHT OUT OF THE BOX

Fast Installation – 3 Easy Steps

1. Install mounting bracket and make electrical wiring connections.
2. Hang the Fan, Connect all wiring using Easy-Connector and secure the canopy.
3. Assemble the Ezi-Fit Blades

Installation is complete.

SUGGESTED TOOLS NEEDED

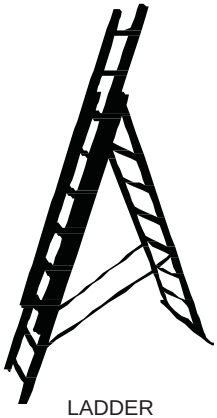

LADDER

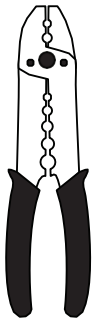

WIRE STRIPPERS

SNUB NOSE PLIERS

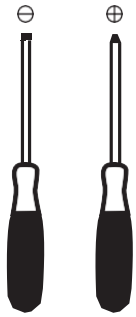

SCREWDRIVERS

CONTENTS

UNPACKING

- Preparation
- Choosing A Suitable Location

INSTALLATION

- Mounting The Hanging Bracket
- Electrical Connections
- Attach Blades
- Hanging The Fan
- Attach Canopy
- Balancing
- Reverse Switch

MAINTENANCE

- Care & Cleaning
- Noise
- Wobble
- Normal Wear & Tear
- Ripple Control Filter

TROUBLESHOOTING

- Technical Data
- Accessories
- Compatible Dimmers List

WARRANTY

UNPACKING

PREPARATION:

- Unpack your ceiling fan carefully and dispose of the packaging materials thoughtfully. Then remove all parts and components and lay on a cloth or soft surface to avoid damage. DO NOT lay the motor housing on its side, the housing may get damaged.
- Before commencing installation, check that all parts are included. NB: You may need to remove all foam packaging material to ensure there are no missing components.

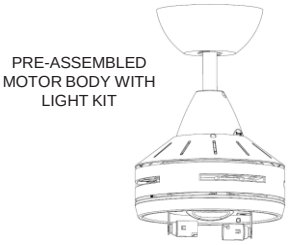

PRE-ASSEMBLED MOTOR BODY WITH LIGHT KIT

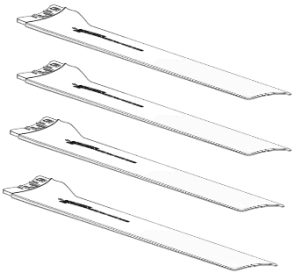

BLADES (4)

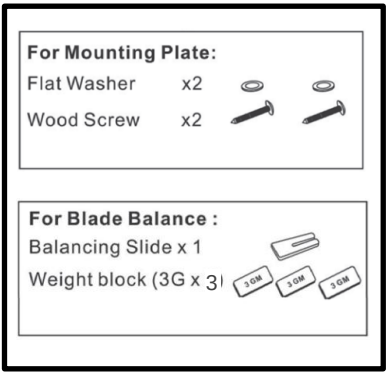

HARDWARE BAG

WALL CONTROLLER

MOUNTING BRACKET

CHOOSING A SUITABLE LOCATION:

- Ceiling fans should be installed in the middle of the room, with a safe distance of at least 2.1m from floor, and 150mm from wall.
- An extension rod may be required for rake ceiling installation.

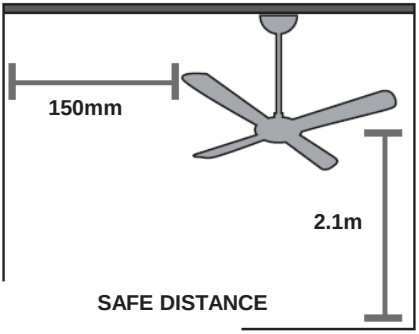

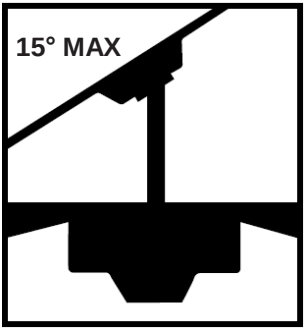

INSTALLATION

CAUTION: Before installing the fan, make sure you have turned OFF the electricity supply.

MOUNTING THE HANGING BRACKET

1. Secure the hanging bracket to the ceiling joist or suitable structure that is capable of carrying a load of at least 45kg, with the two long fixing screws provided. Ensure that at least 30mm of the screw is threaded into the support.
   NB: The fixing screws included are designed for use when ceiling fan is secured onto timber joists. For all other surfaces, additional and suitable fixing screws for that surface will need to be purchased.

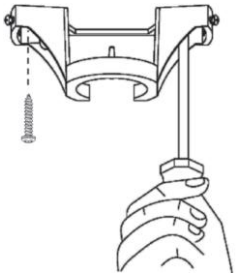

NOTE: Ensure building cable will enter the canopy close to terminal block .

2. Make sure that the position of installation will not allow the blades to come into contact with any object. The fan must be mounted so that the tips of the blades are **at least** 2.1 metres above the floor.

ELECTRICAL CONNECTIONS

The building cable should enter the canopy about 10-15mm from the terminal block.
Connect the mains supply cable to the terminal block **'H'** and Wall controller as per marking on it. Ensure connections are firm. For your convenience, and to assist in easy installation, your ceiling fan is connected with Brilliant's easy connect system. Simply connect the male and female connectors (A to B), and then ensure all excess wiring is retained inside the ceiling canopy.

Terminal block 'H'

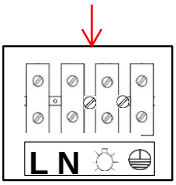

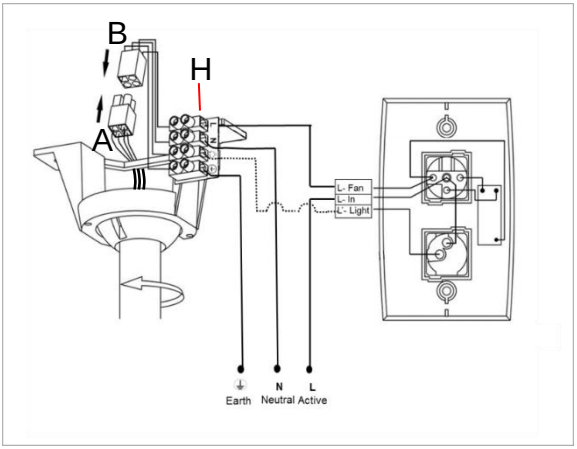

Wall Controller

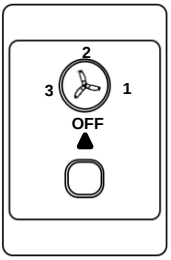

INSTALLATION

ATTACH BLADES

1. Push the Ezi-Fit blades into the slots to lock - No tools or screws needed for blade assembly.
2. Ensure blades are fully inserted – A positive click will be heard when blade locking tabs engage.

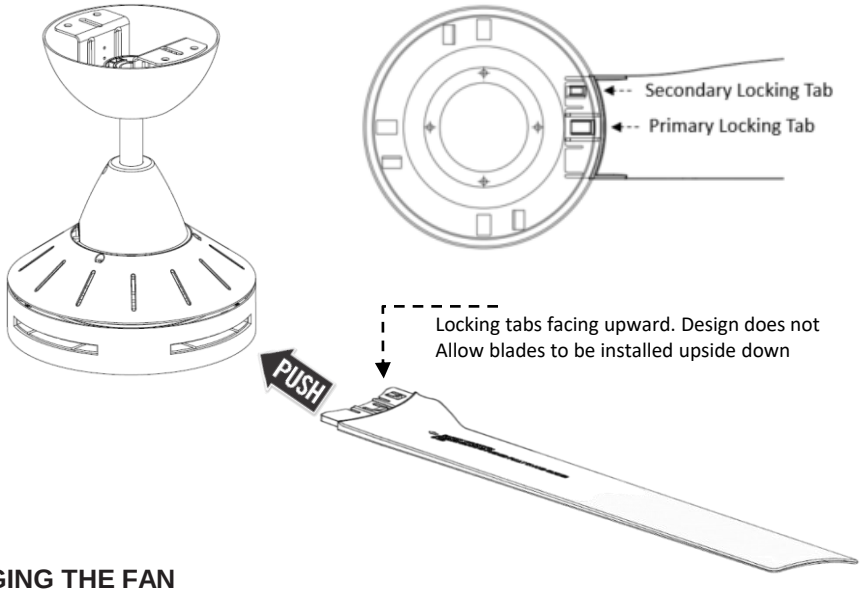

HANGING THE FAN

1. Carefully lift the fan and place the down rod ball assembly into the mounting plate ensuring that the ball correctly locks into place.
2. Refer to the following section detailing 'Electrical Connection' on page 6 for details on how to wire this product correctly.
3. After the fan has been wired to the power supply, carefully position all excess cable inside the boundaries of the hanging bracket.

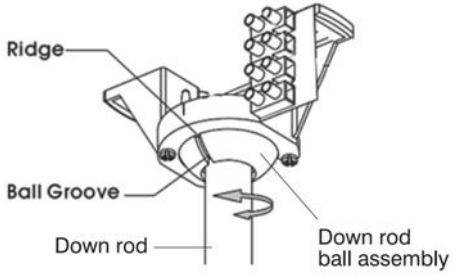

INSTALLATION

REMOVING THE BLADES

1. Remove 3 x screws and lift fan body top cover up to reveal blade locking tabs.
2. Push primary and secondary locking tabs down with a tool such as a screwdriver and remove blades.

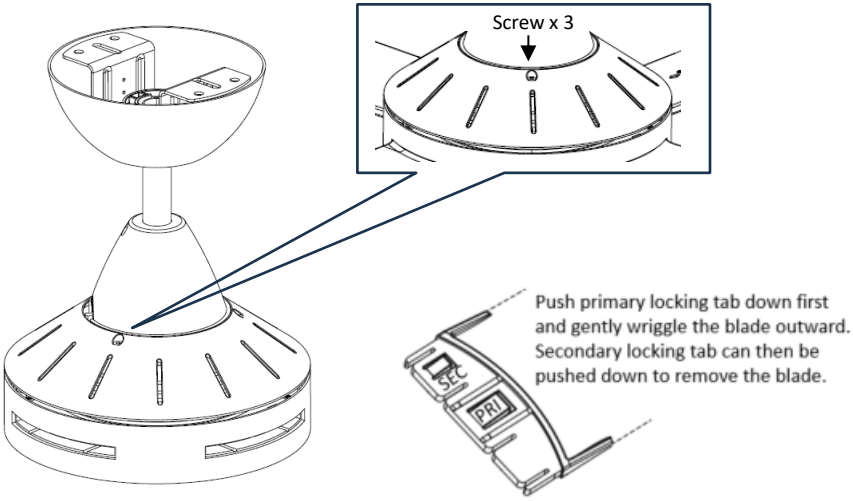

ATTACH CANOPY

Carefully slide the canopy up to cover the hanging bracket and ball joint, taking care not to damage any wires. Once in position, secure the canopy with the screws provided.

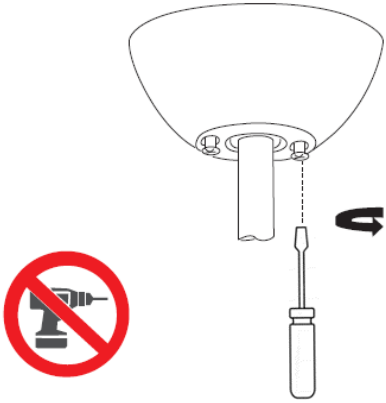

INSTALLATION

BALANCING

This fan includes a blade balancing kit. Upon initial installation, the balance kit should be used on the fan blades to reduce wobble.

The balance kit includes instructions on how to perform the balancing procedure.

Balancing the fan and reducing wobble will result in quieter operation and optimum performance.

REVERSE SWITCH

The 'Summer/Winter' switch should be in the left position to make the fan rotate in an anti-clockwise direction during summer. In winter, this switch should be reversed (move to RIGHT position) so that the blades now move in a clockwise direction.

To change the summer/winter switch, used a small flat blade screwdriver. Insert into the gap on top of the fan where the F and R marking is and move the switch to desired setting

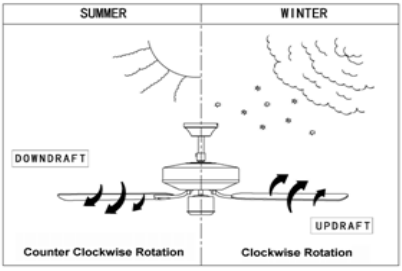

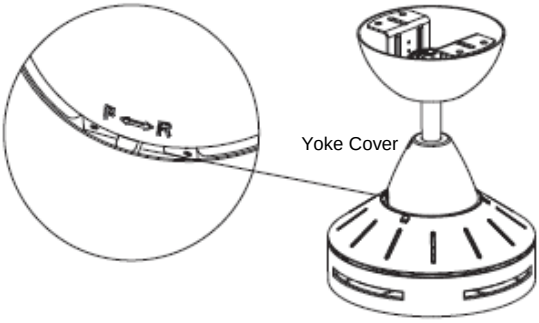

INSTALLATION

ATTACH GLASS DIFFUSER AND REMOVAL

To install the light diffuser, simply align the groove openings in the diffuser with the pips inside the housing and twist clockwise until secure.

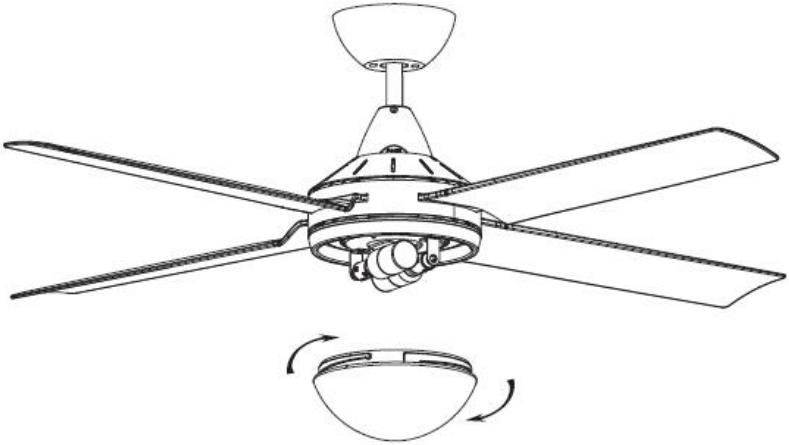

Figure: Above figure is for re-attaching the diffuser, to remove follow the above figure but in reverse.

INSTALLING AND REPLACING LIGHT GLOBES

Turn off power to the fam, Then remove the glass diffuser by twisting anti-clockwise. The Fan supports 2 x 40W MAX B22 type globes (not included), then attach the globes to the lamp holders, make sure they are secure tightly.
After finished reattach the glass diffuser back to the fan body and turn on the power

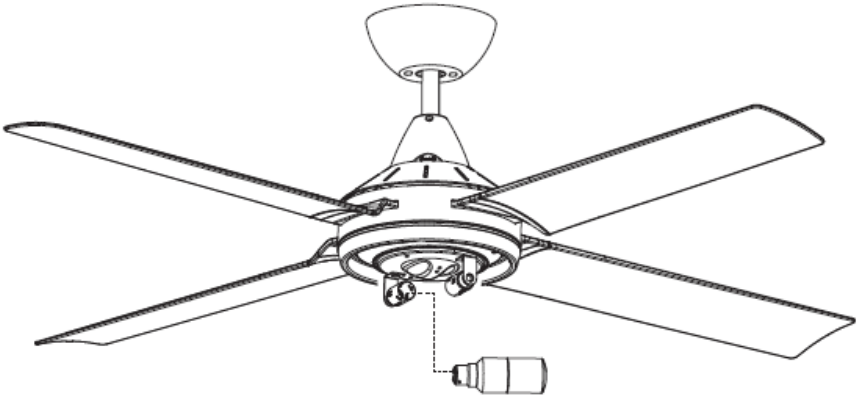

MAINTENANCE

CARE & CLEANING

- Periodic cleaning of your ceiling fan is the only maintenance required.
- Use a soft brush or lint free cloth to avoid scratching the finish. Please turn off electricity when you do so.
- Do not use water when cleaning your ceiling fan. It could damage the motor or the wood blades and create the possibility of an electrical shock.
- Do not use abrasive cleaning agents as they may damage the finish.
- The motor has a permanently lubricated ball bearing, and as such is maintenance free.

NOISE

The manufacturer warranty covers actual faults that may develop, but NOT minor complaints, e.g. hearing slight noise from motor in operation - ALL ELECTRIC MOTORS ARE AUDIBLE TO SOME EXTENT, more so, when the fan is operating at low speeds.

WOBBLE

- Ceiling fans are mounted very securely on steel brackets with rubber cushioning or with ball joints to allow free movement.
- Ceiling fans are designed to move during operation because they are not generally rigidly mounted - if they were, they could generate excessive ceiling vibration and stress on their mountings.
- Movement of a couple of centimetres is quite OK and does not suggest the fan will fall down.
- Please note that all ceiling fans are not the same, even in the same model - some may move more or less than others.

NORMAL WEAR AND TEAR:

Threaded components working slighting loose or blade carriers even slightly bent due to vigorous cleaning or bumping can cause extra wobble and noise. **THIS IS NOT COVERED UNDER WARRANTY,** but a little care and maintenance can reduce or prevent this problem.

RIPPLE CONTROL FILTER:

In parts of Australia (NSW and QLD), the power company superimposes a signal voltage onto the mains household voltage. This signal voltage is used to remotely control consumer's electric hot water heaters and other devices throughout the surrounding area.
Unfortunately, this signal can appear at the ceiling fan as a loud intermittent "hum" and can cause lights to flicker. If this noise is apparent or lights flicker, please contact your local Electricity service provider on how they can assist to provide rectification, usually in the form of a mains supply ripple filter to filter out this signal.

TROUBLESHOOTING

TROUBLE	PROBABLE CAUSE	SUGGESTED REMEDY
Fan/Light will not start	**A**. Fuse or circuit breaker has blown.	**A**. Check main and branch circuit breakers.
	B. Loose wire connections to the fan	**B**. Check line wire connections to the fan.
	C. Speed controller not in the correct position.	**C**. Check speed controller's position.
	D. Loose plug connections to the fan.	**D**. Check plug connections to fan.
Fan wobbles	**A**. Blades not balanced.	**A**. Use balancing kit provided.
	B. Loose blades.	**B**. Insert blades ensuring primary and secondary locking tabs are engaged.
Fan sounds noisy	**A**. Ceiling fan not secured against ceiling.	**A**. Retighten all screws in the hanging bracket.
	B. Incorrect speed controller.	**B**. Change speed controller to the one supplied with the unit.
Mechanical noise	**A**. Fan has not settled in fully	**A**. Allow at least 8 hours settling in period.
	B. Blades not balance.	**B**. Balance the blades.
	C. Hanging bracket or canopy screws are loose.	**C**. Tighten all screws.

TROUBLESHOOTING

TECHNICAL DATA

MODEL NUMBER	SIZE	RATED VOLTAGE	RATED POWER FOR MOTOR	WEIGHT	LIGHT POWER
22878	48 INCH	220-240V AC	65W	5.75 kg	40W MAX
22880	52 INCH	220-240V AC	65W	5.80 kg	40W MAX

ACCESSORIES (NOT INCLUDED – SOLD SEPERATELY)	
Extension Rods with Loom kit	Remote Kit
100550/05 (white) 90cm 100550/06 (black) 90cm 20912/05 (white) 180cm 20912/06 (black) 180cm	99222 (LCD display non smart) 99111 (Smart) 99999 (Basic) 99888 (Smart Wall Controller) 88888 (Touch Remote) 99444 (Basic) 99777 (Wall Multi Fan Control)

SPARE PART (NOT INCLUDED – SOLD SEPERATELY)	
48” BLADE KIT (MATT WHITE)	22874SP051
48” BLADE KIT (MATT BLACK)	22874SP061
52” BLADE KIT (MATT WHITE)	22876SP051
52” BLADE KIT (MATT BLACK)	22876SP061
WALL CONTROLER	20269
GLASS DIFFUSER ONLY	22878SP001

Compatible Dimmers List

Dimmer Compatibility will depend on the brand of globes used to fit the B22 lamp holders.
Please contact globe manufacture for compatible dimmers

WARRANTY

Please note, this warranty voids any other warranties supplied with this product and complies with the new consumer guarantee requirements.

The benefits conferred by this warranty are in addition to all implied warranties, other rights and remedies in respect of the product, which the consumer has under Australian Consumer Law.

The original purchaser of this Brilliant Ceiling Fan is provided with the following warranty subject to the Brilliant Warranty terms and conditions as found on the Brilliant website and the following conditions.

Brilliant Lighting (Aust) Pty Ltd warrants this ceiling fan motor for a period of 6 years from the date of purchase, the first 3 years are covered by an In-home warranty. All parts deemed defective in workmanship or materials will be replaced free of charge. Remote controllers, Wall controllers and Light fittings are subject to Limited warranty status.

PARTS	TOTAL WARRANTY PERIOD	IN-HOME SERVICE PERIOD
Ceiling Fan Motor	6 YEARS	3 YEARS
Wall Controller	2 YEARS	2 YEARS
Light Fittings	2 YEARS	2 YEARS

**Consumable items such as Batteries and Light Globes will not be covered by this warranty.*

This warranty is in addition to any other rights and remedies of the customer under any law. In applications not intended for household, personal or domestic use, liability is limited to replacement or reimbursement of product only.

The warranted use of fans outdoors are limited to Enclosed Alfresco like areas where conditions are remote-control indoor installations.
The warranty conditions for fans installed in Enclosed Alfresco areas are as follows:

* *Fan must be shielded from wind and rain (enclosed area, min. 1.5m from edge of eave/roof).*
* *The warranty will cover open circuit motor faults, and remote-control faults if not related to outdoor exposure.*
* *The Warranty will not cover outdoor related issues such as rusting, or failure clearly caused by water, moisture or wind.*
* *The Warranty will not cover external appearance or finish of any part of the ceiling fan.*
* *The Warranty will not cover wooden blades. These are recommended only to be used indoors.*

The warranty does not cover Ripple Control noise/interference (identified by a periodic or intermittent hum). This must be addressed with your energy service provider.
The warranty does not cover noises or faults due to poor installation or failure to balance fans as per instructions.

Our goods come with guarantees that cannot be excluded under the Australian Consumer Law. You are entitled to a replacement or refund for a major failure and compensation for any other reasonably foreseeable loss or damage. You are also entitled to have the goods repaired or replaced if goods fail to be of acceptable quality and the failure does not amount to a major failure.

Any claim under this warranty must be made within the warranty period of the date of purchase of the product. To make a warranty claim please refer to the Warranty Claim Form on the Brilliant Website: www.brilliantlighting.com.au

This warranty is given by:
Brilliant Lighting (Aust) Pty. Ltd.
ABN 37 006 203 694
Caribbean Park, 36 Lakeview Drive, Scoresby, VIC 3179, Australia
Phone: 03 9765 2555
Email: warranty@brilliantlighting.com.au
MADE IN CHINA